315W Constant Power Mode with DALI-2 LED Driver XLG-320-DA2 series

User's Manual
Scan or Click



(For M&L Type) (For H Type) DC Input: 176-280Vdc (Except for M&L type) Note 15 Type HL Note 7 (for XLG-320I-DA2 type only)

Features

- Wide input range 100~305V AC(Class I)
- Full power output at 70~100% Constant power mode operation
- Metal case with IP67, suitable for outdoor application
- Surge protection with 6KV/4KV
- DALI-2 Dimming with minimum level 8%
- 12V/250mA Auxiliary power available(optional)
- India (EESL) version with Input Over Voltage Protection can survive input voltage stress of 440Vac for 48 hours(optional)
- Protection functions: SCP/OTP
- Life time >50,000 hrs. and 5 years warranty

Applications

- Street lighting
- Floodlight Lighting
- Stage lighting
- Fishing lighting
- Horticulture lighting
- Bay lighting
- Type HL for use in class I, Division 2

GTIN CODE

MW Search: https://www.meanwell.com/serviceGTIN.aspx

Description

XLG-320-DA2 series is a 320W LED AC/DC driver featuring the constant power mode with DALI-2 dimming function. XLG-320-DA2 operates from 100~305VAC and offers models with different rated current ranging between 1050mA and 7420mA. Thanks to the high efficiency up to 94.5%, with the fanless design, the entire series is able to operate for -40℃~+85℃ case temperature under free air convection. The design of metal housing and IP67 ingress protection level allows this series to fit both indoor and outdoor applications. Moreover the innovative environment-adaptive capability allows this series to reliably light on the LEDs for all kinds of application environments in almost any spots that may install LED luminaires in the world. XLG-320-DA2 series comply with the latest version of IEC61347/GB/T19510.1 and UL8750 international safety regulations. The output and dimming circuit are also completely in accordance with the new regulations with isolation to ensure the safety of both user and luminaire system during installation.

Model Encoding

XLG - 320 [I] - [L] - [DA2]

- DA2: DALI-2 dimming function
  DA2-A: DALI-2 dimming function with12V/250mA Auxiliary available(optional)
- Rated output voltage(L/M/H types)
- □: For standard version
  I:For India version(by request with Input over voltage protection)
- Rated wattage
- Series name

Type	Function	Note
DA2	DALI-2 control technology with Io adjustable via built-in potentiometer	In Stock
DA2-A	DALI-2 control technology with Io adjustable via built-in potentiometer and auxiliary power 12V/250mA	by request

315W Constant Power Mode with DALI-2 LED Driver XLG-320-DA2 series

SPECIFICATION

MODEL		XLG-320□-L-□	XLG-320□-M-□	XLG-320□-H-□
OUTPUT	RATED CURRENT(Default)	1400mA	2800mA	5600mA
	RATED POWER	315W	310.8W	312W
	CONSTANT CURRENT REGION Note.2	150 ~300V	74 ~ 148V	30 ~ 56V
	FULL POWER CURRENT RANGE	1050~1400mA	2100~2800mA	5570~7420mA
	OPEN CIRCUIT VOLTAGE (max.)	340V	180V	65V
	CURRENT ADJ. RANGE	(Via the built-in potentiometer)		
		500~1400mA	1050~2800mA	2800~7420mA
	CURRENT RIPPLE	5.0%(@ full load)		
	CURRENT TOLERANCE	±5%		
	AUXILIARY DC OUTPUT	12V@250mA tolerance ±10%, ripple 200mVp-p (only for DA2-A-type)		
	SET UP TIME Note.6	500ms/230VAC, 1200ms/115VAC		
INPUT	VOLTAGE RANGE Note.4	100 ~ 305VAC 142VDC ~ 431VDC (Please refer to "STATIC CHARACTERISTIC" ang " DRIVING METHODS OF LED MODULE"section)		
	FREQUENCY RANGE	47 ~ 63Hz		
	POWER FACTOR (Typ.)	PF≧0.97 / 115VAC, PF≧0.95 / 230VAC, PF≧0.92 / 277VAC at full load (Please refer to "Power Factor Characteristic" section)		
	TOTAL HARMONIC DISTORTION	THD< 10% @ load≧50% at 115VAC/230VAC ,THD< 15% @load≧75% at 277VAC Please refer to "TOTAL HARMONIC DISTORTION (THD)" section		
	EFFICIENCY (Typ.) Note.14	94.5%	93.5%	92.5%
	AC CURRENT (Typ.)	3.2A / 120VAC 1.6A / 230VAC 1.3A/277VAC		
	INRUSH CURRENT(Typ.)	COLD START 45A(twidth=1200μs measured at 50% Ipeak) at 230VAC; Per NEMA 410		
	MAX. NO. of PSUs on 16A CIRCUIT BREAKER	2 unit(circuit breaker of type B) / 4 units(circuit breaker of type C) at 230VAC		
	LEAKAGE CURRENT	<0.75mA / 277VAC		
	STANDBY POWER CONSUMPTION	Standby power consumption <0.5W (Dimming OFF, Only for standard version DA2-type)		
PROTECTION	SHORT CIRCUIT	Hiccup mode or Constant current limiting, recovers automatically after fault condition is removed		
	INPUT OVER VOLTAGE Note.7	320 ~ 390VAC (Shut down output voltage when the input voltage exceeds protection voltage,recovers automatically after fault condition is removed)		
		Can survive input voltage stress of 440Vac for 48 hours		
	OVER TEMPERATURE	Stage 1: Derating to 75% loading; stage 2: Derating to 50% loading. recovers automatically after fault condition is removed		
ENVIRONMENT	WORKING TEMP.	Tcase=-40 ~ +85℃ (Please refer to "OUTPUT LOAD vs TEMPERATURE" section)		
	MAX. CASE TEMP.	Tcase=+85℃		
	WORKING HUMIDITY	20 ~ 95% RH non-condensing		
	STORAGE TEMP., HUMIDITY	-40 ~ +80℃, 10 ~ 95% RH non-condensing		
	TEMP. COEFFICIENT	±0.06%/℃ (0 ~ 60℃)		
	VIBRATION	10 ~ 500Hz, 5G 12min./1cycle, period for 72min. each along X, Y, Z axes		
SAFETY & EMC	SAFETY STANDARDS	UL8750(type"HL"), CSA C22.2 No. 250.13-12; ENEC BS EN/EN61347-1, BS EN/EN61347-2-13 (EL) appendix J suitable for emergency installations(DC Input: 176-280Vdc) independent ,GB/T19510.1 , GB/T19510.213; EAC TP TC 004; IS 15885(Part2/Sec13)(for XLG-320I-DA2 only); IP67 approved		
	DALI STANDARDS	Comply with IEC62386-101,102,207,251,Device type 6(DT6)		
	WITHSTAND VOLTAGE	I/P-O/P:3.75KVAC I/P-FG:2KVAC O/P-FG:1.8KVAC		
	ISOLATION RESISTANCE	I/P-O/P, I/P-FG, O/P-FG:100M Ohms / 500VDC / 25℃/ 70% RH		
	EMC EMISSION	**Parameter**	**Standard**	**Test Level/Note**
		Conducted	BS EN/EN55015(CISPR15),GB/T 17743	-----
		Radiated	BS EN/EN55015(CISPR15),GB/T 17743	-----
		Harmonic Current	BS EN/EN61000-3-2,GB17625.1	Class C @load≥50%
		Voltage Flicker	BS EN/EN61000-3-3	-----
	EMC IMMUNITY	BS EN/EN61547		
		Parameter	**Standard**	**Test Level/Note**
		ESD	BS EN/EN61000-4-2	Level 3, 8KV air ; Level 2, 4KV contact
		Radiated	BS EN/EN61000-4-3	Level 2
		EFT/Burst	BS EN/EN61000-4-4	Level 3
		Surge	BS EN/EN61000-4-5	4KV/Line-Line 6KV/Line-Earth
		Conducted	BS EN/EN61000-4-6	Level 2
		Magnetic Field	BS EN/EN61000-4-8	Level 4
		Voltage Dips and Interruptions	BS EN/EN61000-4-11	>95% dip 0.5 periods, 30% dip 25 periods, >95% interruptions 250 periods
OTHERS	MTBF	1397.7Khrs min. Telcordia SR-332 (Bellcore) ; 145.1Khrs min. MIL-HDBK-217F (25℃)		
	DIMENSION	246*77*39.5mm (L*W*H)		
	PACKING	1.45Kg;9pcs/14Kg/0.76CUFT		

NOTE

1. All parameters NOT specially mentioned are measured at 230VAC input, rated current and 25℃ of ambient temperature.
2. Please refer to "DRIVING METHODS OF LED MODULE".
3. Tolerance : includes set up tolerance, line regulation and load regulation.
4. De-rating may be needed under low input voltages. Please refer to "STATIC CHARACTERISTIC" sections for details.
5. Length of set up time is measured at first cold start. Turning ON/OFF the driver may lead to increase of the set up time.
6. Based on IEC 62386-101/102 DALI power on timing and interruption regulations,the set up time needs to test with a DALI controller which can support for DALI power on function,otherwise the set up time will be longer than 500ms.
7. Input over voltage only for XLG-320 I series,and I series without UL/CSA certificate.
8. The driver is considered as a component that will be operated in combination with final equipment. Since EMC performance will be affected by the complete installation, the final equipment manufacturers must re-qualify EMC Directive on the complete installation again. (as available on https://www.meanwell.com//Upload/PDF/EMI_statement_en.pdf)
9. The ambient temperature derating of 3.5℃/1000m with fanless models and of 5℃/1000m with fan models for operating altitude higher than 2000m(6500ft).
10. Please refer to the warranty statement on MEAN WELL's website at http://www.meanwell.com
11. This series meets the typical life expectancy of >50,000 hours of operation when Tcase, particularly (tc) point (or TMP, per DLC), is about 75℃ or less.
12. Products sourced from the Americas regions may not have the CCC/PSE/BIS/KC logo. Please contact your MEAN WELL sales for more information.
13. For any application note and IP water proof function installation caution, please refer our user manual before using. https://www.meanwell.com/Upload/PDF/LED_EN.pdf
14. The efficiency will drop 1% based on auxiliary power version with full load 3W condition.
15. H type:RCM is on a voluntary basis. Non IC classification Independent LED control gear is not suitable for residential installations; M/L type:RCM is on a voluntary basis and meets relevant IEC or AS/NZS standards complying with AS/NZS 4417.1
16. To fulfill requirements of the latest ErP regulation for lighting fixture, this LED driver can only be used behind a switch without permanently connected to the mains.
17. This series need to consider build in using to comply with Type HL application.

※ Product Liability Disclaimer : For detailed information, please refer to https://www.meanwell.com/serviceDisclaimer.aspx

■ BLOCK DIAGRAM

PFC fosc : 50~120KHz
PWM fosc : 60~130KHz

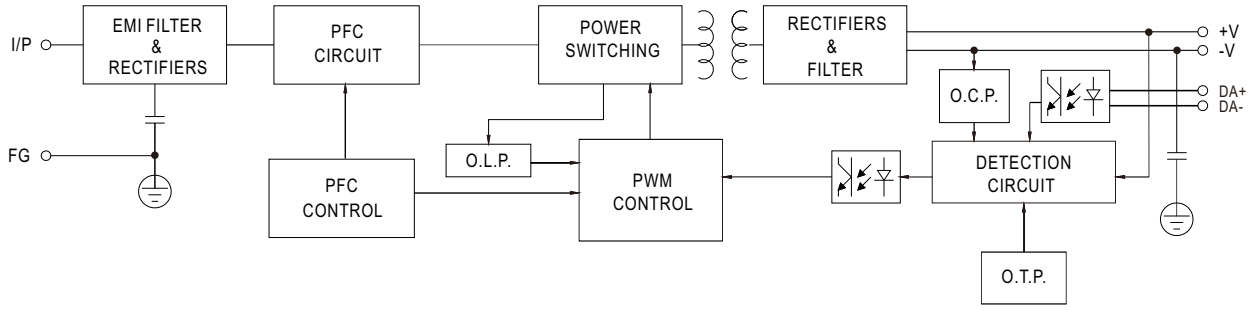

■ DRIVING METHODS OF LED MODULE

※ I-V Operating Area

◎ XLG-320-L-DA2

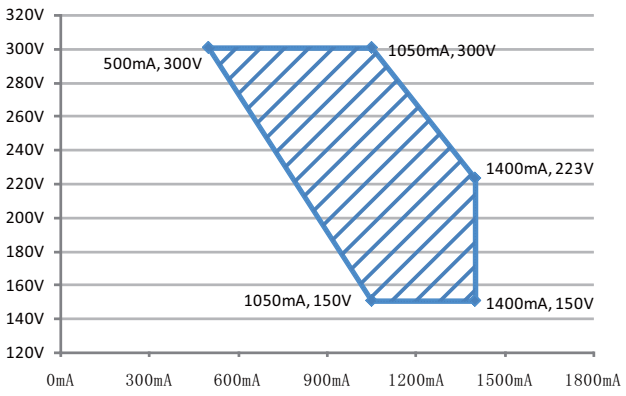

Recommend Performance Region

◎ XLG-320-M-DA2

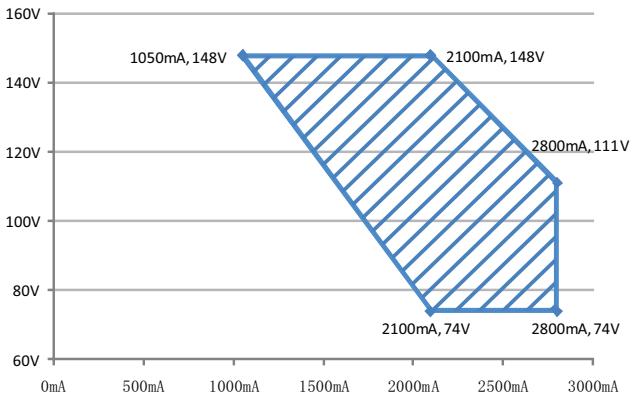

Recommend Performance Region

◎ XLG-320-H-DA2

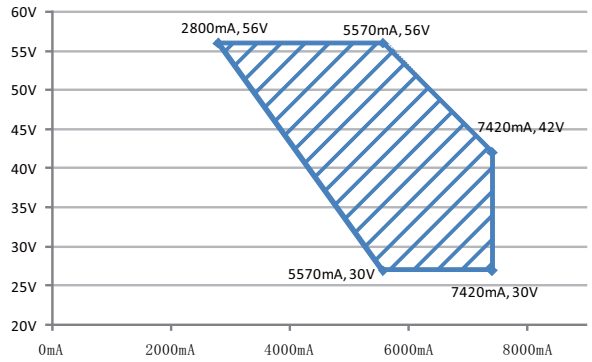

Recommend Performance Region

■ DIMMING OPERATION

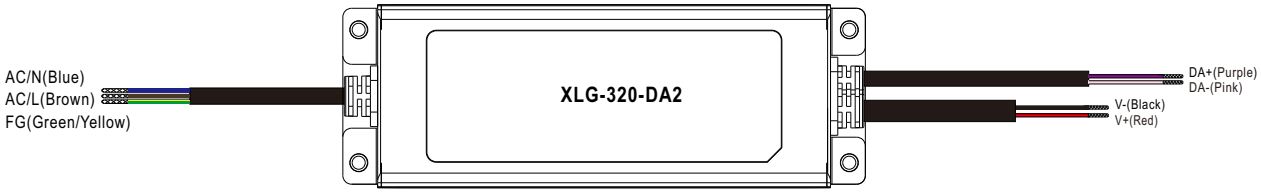

※ **DALI Interface**

- Apply DALI signal between DA+ and DA-.
- DALI protocol comprises 16 groups and 64 addresses.
- First step is fixed at 8% of output.

■ OUTPUT LOAD vs TEMPERATURE

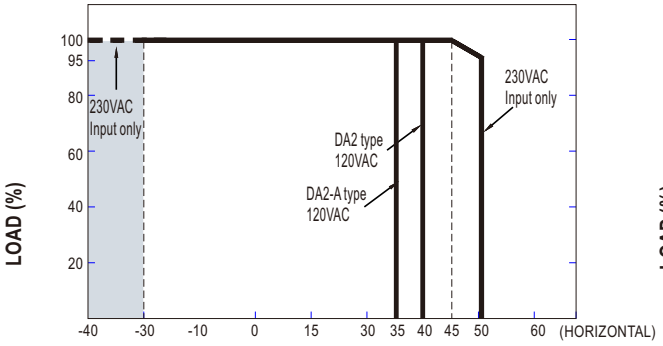

AMBIENT TEMPERATURE,Ta (℃)

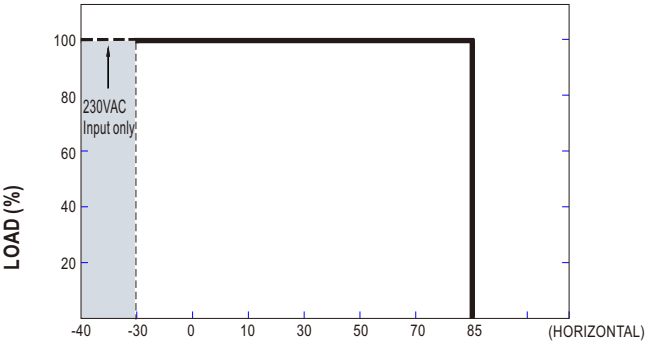

Tcase (℃)

■ STATIC CHARACTERISTIC

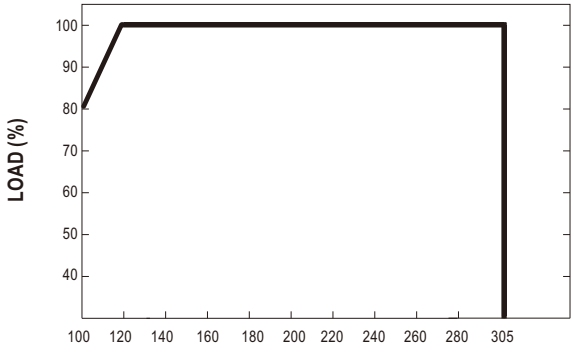

INPUT VOLTAGE (V) 60Hz

■ POWER FACTOR (PF) CHARACTERISTIC

※ Tcase at 75℃

Constant Current Mode

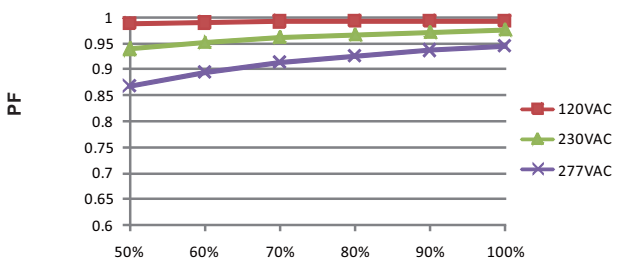

LOAD

■ TOTAL HARMONIC DISTORTION (THD)

※ XLG-320-L-DA2 Model, Tcase at 85℃

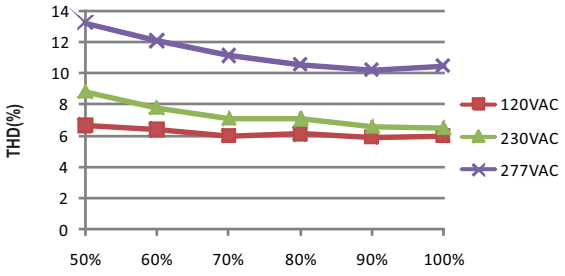

■ EFFICIENCY vs LOAD

XLG-320-DA2 series possess superior working efficiency that up to 94.5% can be reached in field applications.

XLG-320-L-DA2 Model, Tcase at 85℃

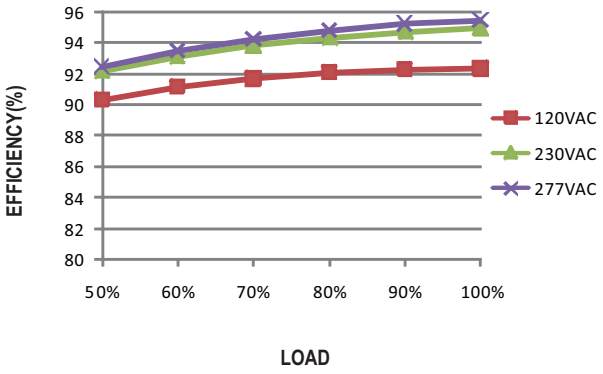

■ LIFE TIME

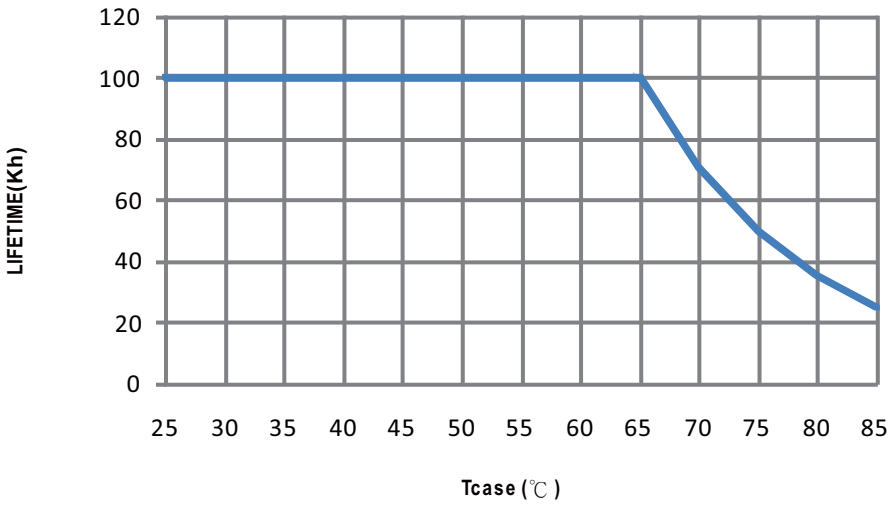

■ MECHANICAL SPECIFICATION

Case No.: 266A Unit:mm Tolerance:±1

※ DA2-Type

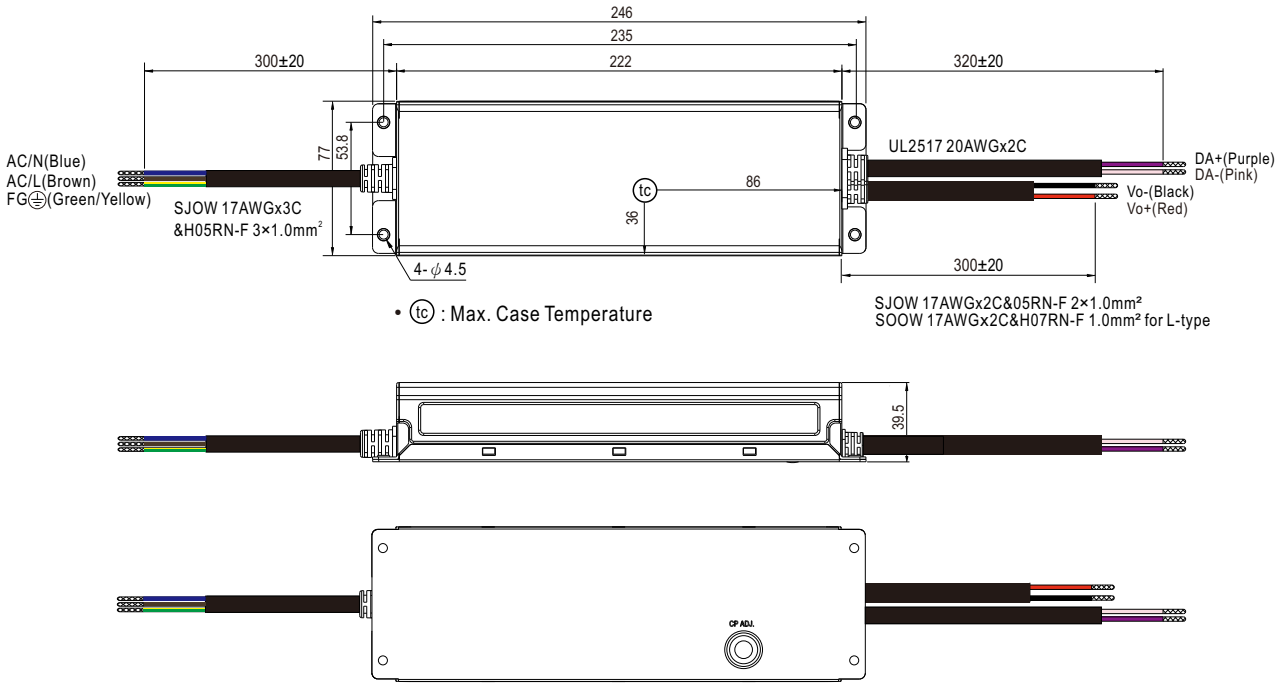

• tc : Max. Case Temperature

SJOW 17AWGx2C&05RN-F 2×1.0mm²
SOOW 17AWGx2C&H07RN-F 1.0mm² for L-type

※ DA2-A-Type (by optional)

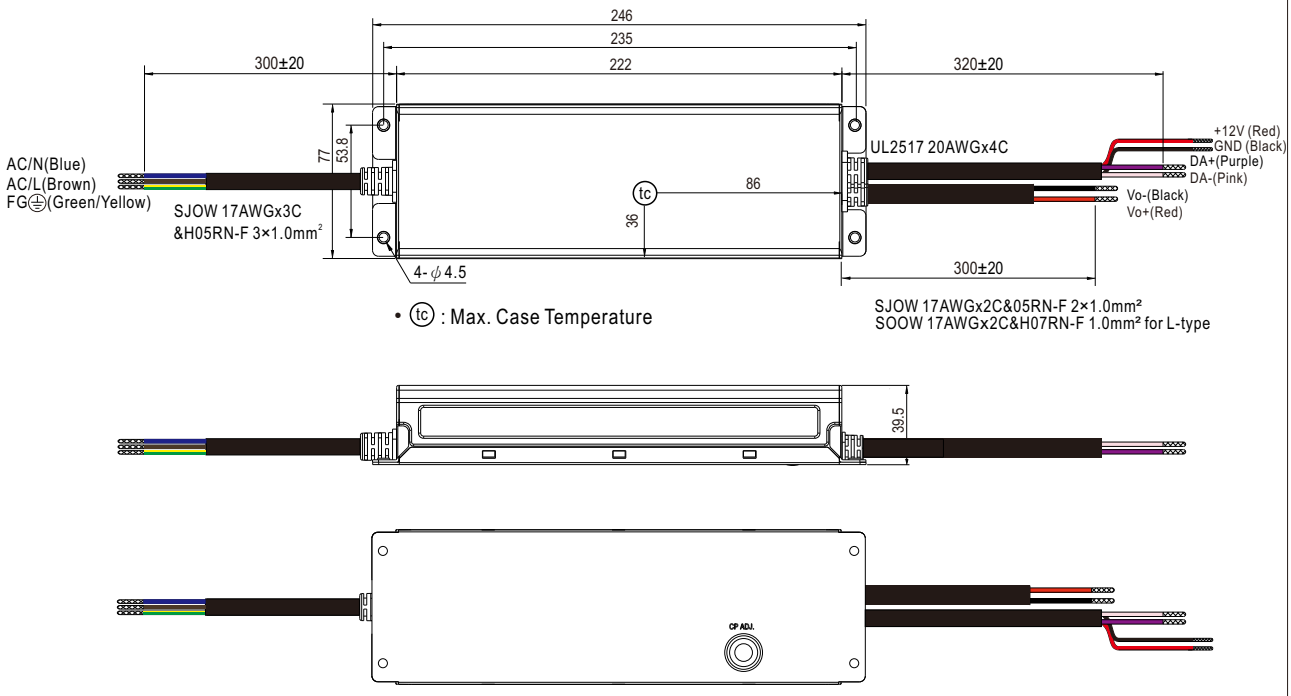

• tc : Max. Case Temperature

SJOW 17AWGx2C&05RN-F 2×1.0mm²
SOOW 17AWGx2C&H07RN-F 1.0mm² for L-type

■ Recommend Mounting Direction

